One Source

Open gearing

FLSmidth

MAAG GEAR

Efficient and reliable mill and kiln operation with MAAG™ girth gears

FLSmidth MAAG Gear's comprehensive expertise in forged gear ring technology is the result of over 50 years of experience, working in collaboration with leading mill suppliers and the technical Universities. FLSmidth MAAG Gear is a leading supplier in the cement and mineral industry, and has sold over 800 mill girth gears and 200 kiln girth gears across the world.

As a member of American Gear Manufacturers Association (AGMA), FLSmidth MAAG Gear is actively involved in defining the standard for gear rating calculations, service factors and other design standards (AGMA Std. 6014).

Technology

- Fabricated steel
  - forged ring
  - rolled plate
- Cast steel
- Ductile (nodular) cast iron

Typically, FLSmidth MAAG Gear manufactures fabricated girth gears with forged gear rim materials and bodies made in an electro-welded structure. For the production of cast steel and ductile cast iron, FLSmidth MAAG Gear works closely with world-leading foundries to source the raw material for the gears.

Advantages of forged/fabricated girth gears

- The forged material structure excludes the risk of inclusions
- Structure defects such as gas holes, hot tears, sand and slag inclusions are avoided

This means that body structure repair welding or the grinding of toothed areas is not required.

- The fabrication technology process excludes the need for patterns and risers
- The rim material has higher grade hardness and strength than the material used for the underlying structure (i.e. web, gussets)

These features reduce the lead time and cost. The fabrication technology process ensures fast delivery. This is particularly advantageous in an emergency situation, where an existing gear rim has suffered damage.

Development/calculation

FLSmidth MAAG Gear engineers are highly experienced; they design and engineer gears to customer requirements using the very latest finite elements modelling software. FLSmidth MAAG Gear is an expert in involute toothing and the company's approach is based on profile modification, which was invented by the company founder, Max Maag.

Production capacity

Continuous investment and modernisation of the machine shop guarantees state-of-the-art girth gear production.

Measurements

- External teeth
  Maximum diameter: 11200 mm
  Width: 1250 mm
  Maximum module: 45 by hob
- Internal teeth
  Maximum Diameter: 6500 mm
  Maximum module: 25.4
  Width: 400 mm

Pinions custom-made to meet your requirements

In addition to girth gear development, FLSmidth MAAG Gear also designs and develops pinions and has improved pinion technology. The correct combination of material, hardness and finishing between pinion and gear is crucial to ensuring the installed equipment has a long service life.

Pinion designs

- Self-aligning
- Spur, helical or double helical
- Bored and integral
- Forged alloyed steel
- Through-hardened, quenched and tempered
- Carburised and ground
- Induction-hardened
- Nitrided

Heat treatment

FLSmidth MAAG Gear is a leading heat treatment specialist, with a modern heat treatment facilities. The company has developed, improved and patented several heat treatment processes. Heat treatment is a critical manufacturing process and its control ensures the best material quality and characteristics.

Engineering

FLSmidth MAAG Gear's teams of engineers design the gearing of various pinions for new installations with the required tooth flank modification, for example profile and lead correction. FLSmidth MAAG Gear also re-engineers installed pinions. If a pinion replacement requires a higher performance or different speed, FLSmidth MAAG Gear will take responsibility for the design of the new gearing.

Production capacity

Pinions are as various as their applications and are mainly custom-made for specific needs. With its modern production sites and by continuously investing in technology, knowledge and in their network of partners, FLSmidth MAAG Gear ensures that it meets customer and market requirements today and tomorrow.

▼ Self aligning pinion
1 Sliding parts
2 Toothed coupling
3 Pinion shaft
4 Angular swing bearings

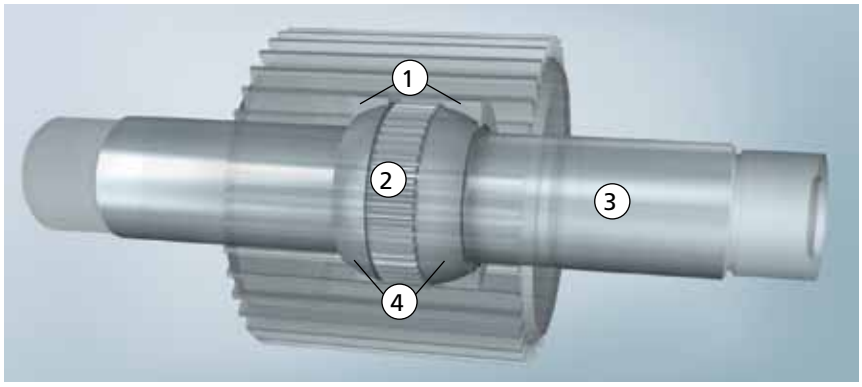

One Source

Components of success

www.FLSmidthMaagGear.com

C 07-12 500-19-ENG V1

Pitch measuring:
Klingelnberg EVTM-D

FLSmidth MAAG Gear continually strives to improve customer satisfaction, and make each customer's gear or pinion their priority.

Testing/standards

FLSmidth MAAG Gear customers rely on MAAG™ products, which undergo strict tests such as NDT-QA inspection, NON-destructive testing and Ultrasonic testing, magnetic particle and penetrant testing. FLSmidth MAAG Gear complies with the following international standards: UNI EN ISO, AWS, ASTM, ASME and DIN.

Service

FLSmidth MAAG Gear service engineers install, commission and inspect the equipment, guaranteeing the best possible performance.

Profile measuring:
MAAG/Donner+Pfister ES4300

FLSmidth MAAG Gear values the importance of training local staff; ensuring competent and regular maintenance for the extensive lifetime of the equipment. Together with FLSmidth, the company provides a complete service. To upgrade or revamp existing mill or kiln installations, FLSmidth MAAG Gear service engineers inspect the site and assess the applications carefully; ensuring that the drop-in replacement is smoothly re-installed with the shortest possible down time.

Customer benefits

- Fast and competent service provided by the FLSmidth MAAG Gear global service network
- Real know-how and expertise gained from FLSmidth MAAG Gear's 100 years of experience in the heavy duty industry
- Access to an even wider network of service and know-how because FLSmidth MAAG Gear is a member of the FLSmidth Group
- One-stop shop – engineering, manufacturing, installation, alignment and servicing – FLSmidth MAAG Gear does it all

FLSmidth MAAG Gear AG
Lagerhausstrasse 11 · P.O. Box
8401 Winterthur
Switzerland
Tel +41 52 260 35 00
info@FLSmidthMaagGear.com
www.FLSmidthMaagGear.com

Copyright © 2012 FLSmidth A/S. ALL RIGHTS RESERVED. FLSmidth and MAAG are (registered) trademarks of FLSmidth A/S. This brochure makes no offers, representations or warranties (express or implied), and information and data contained in this brochure are for general reference only and may change at any time.

FLSmidth
MAAG GEAR