One Source

FLSmidth ball mill for cement grinding

FLSmidth

Versatile system based on standard modules

Main features

- **Shell supported ball mill of well-proven design**
- **Side or central drive**
- **Grinds all types of cement and similar products in open or closed circuit to any fineness required**
- **Large through-flow area ensures low pressure drop**
- **Simple maintenance**

The FLSmidth ball mill is designed for grinding of clinker, gypsum and dry or moist additives to any type of cement.

The mill may operate in either open or closed circuit and with or without a pre-grinder to achieve maximum overall grinding efficiency and high flexibility in terms of product quality.

The mill has large through-flow areas, which allows it to operate with large volumes of venting air and a low pressure drop across the mill. Hence the energy consumption of the mill ventilation fan is low.

The mill consists of standard modules and can be adapted to specific requirements in terms of plant layout, mill drive, lining types and end product specifications, as required.

Cement grinding

In two-compartment cement mills, the first, coarse grinding compartment is provided with a step lining that is suitable for large grinding media and ensures optimum lifting of the mill charge. The shell lining in the second compartment or in a one-compartment cement mill is a corrugated lining designed to obtain maximum power absorption and grinding efficiency. For special applications a classifying shell lining may be supplied for fine grinding in the mill.

The ball charge mill consists of grinding media in various sizes to ensure optimum grinding efficiency and easy maintenance. The size distribution of the grinding media in the coarse grinding compartment is designed to just crush the coarsest particles in the mill feed material and to ensure adequate fineness of the material passing the diaphragm. For fine grinding, the charge consists of small balls, which ensures the best possible grinding efficiency without obstructing the material flow through the ball charge.

The STANEX diaphragm between the grinding compartments effectively screens the material passing from the

UMS 5.8 x 18.5

coarse to the fine grinding compartment. The diaphragm is fitted with adjustable lifters to ensure an adequate level of material in the preceding compartment. The STANEX diaphragm is suitable for all applications, even for mills operating with high material flow rates and moist mill feed.

An internal water cooling system may be installed in one or both grinding compartments to optimise mill performance and to ensure an appropriate material temperature inside the mill and at the mill discharge end.

If the materials to be ground contain more water than can be dried off in the first compartment, the mill will be fitted with a bolted-on drying compartment with lifters. Mill performance is monitored by continuous measurements of the material and air temperatures as well as the pressure at the mill exit. The venting of the mill is adjusted by a damper in the inlet to the mill fan. The level of material in the mill is monitored by an electronic device ("electric ear") that measures the noise emission from the mill.

For ball mills operating in closed circuit, the circulation load is monitored by weighing the flow of reject material from the separator.

Mill inlet with water injection

Slide shoe bearing

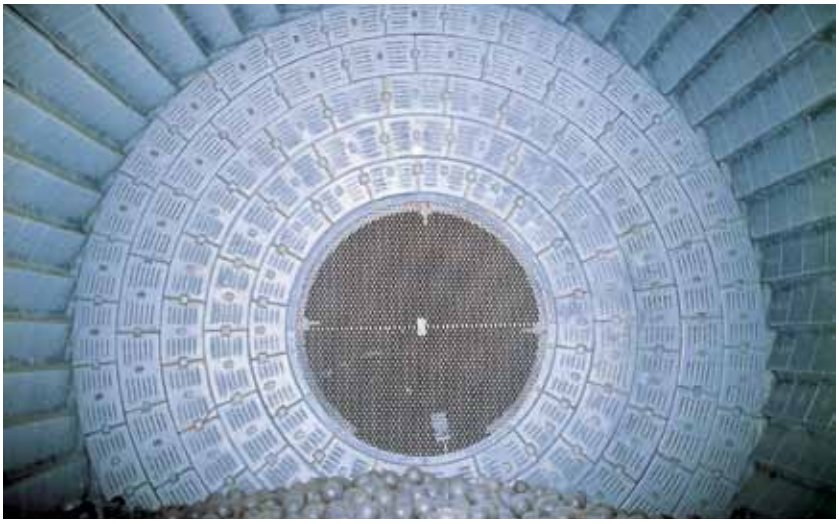

STANEX diaphragm

FLSmidth ball mill

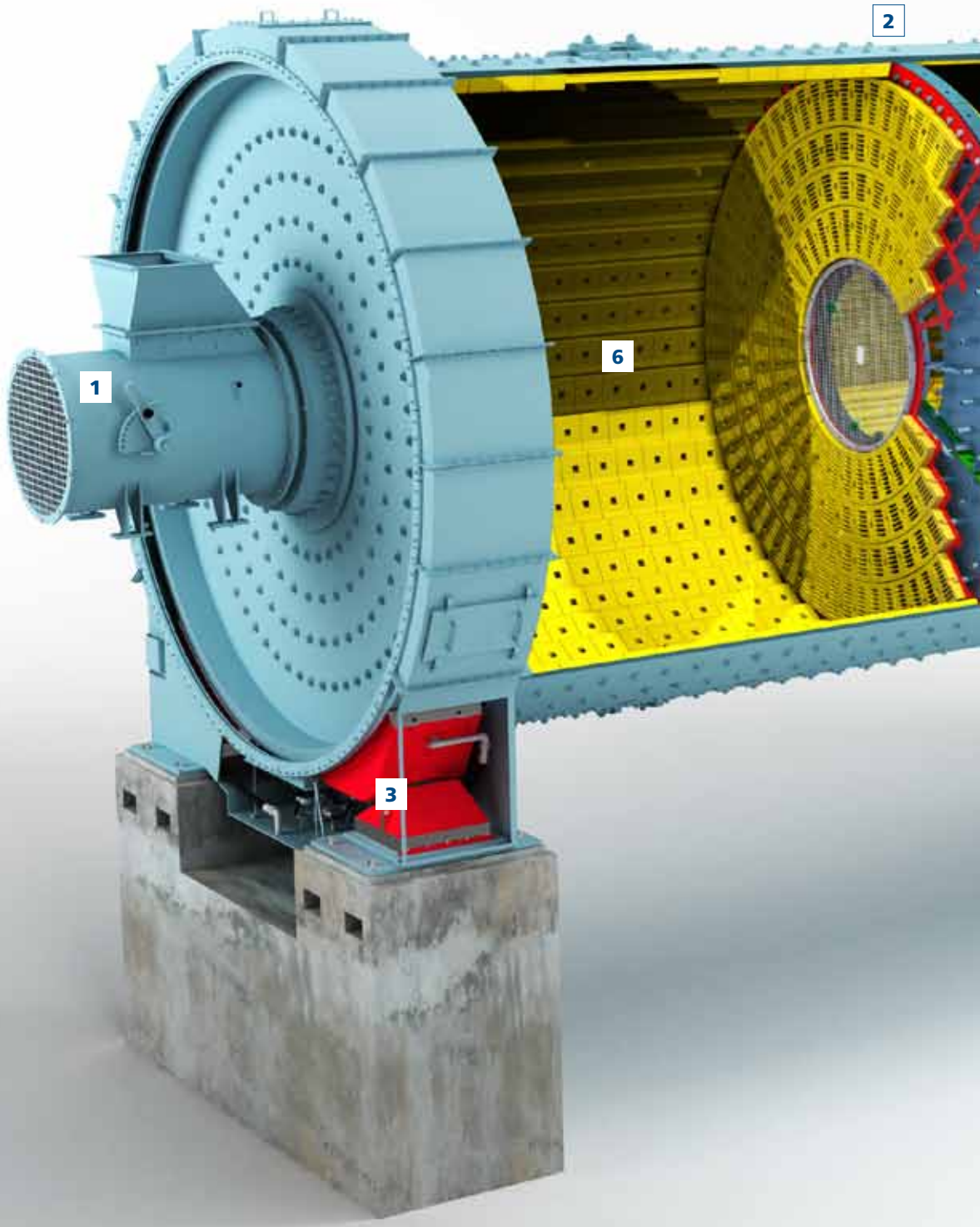

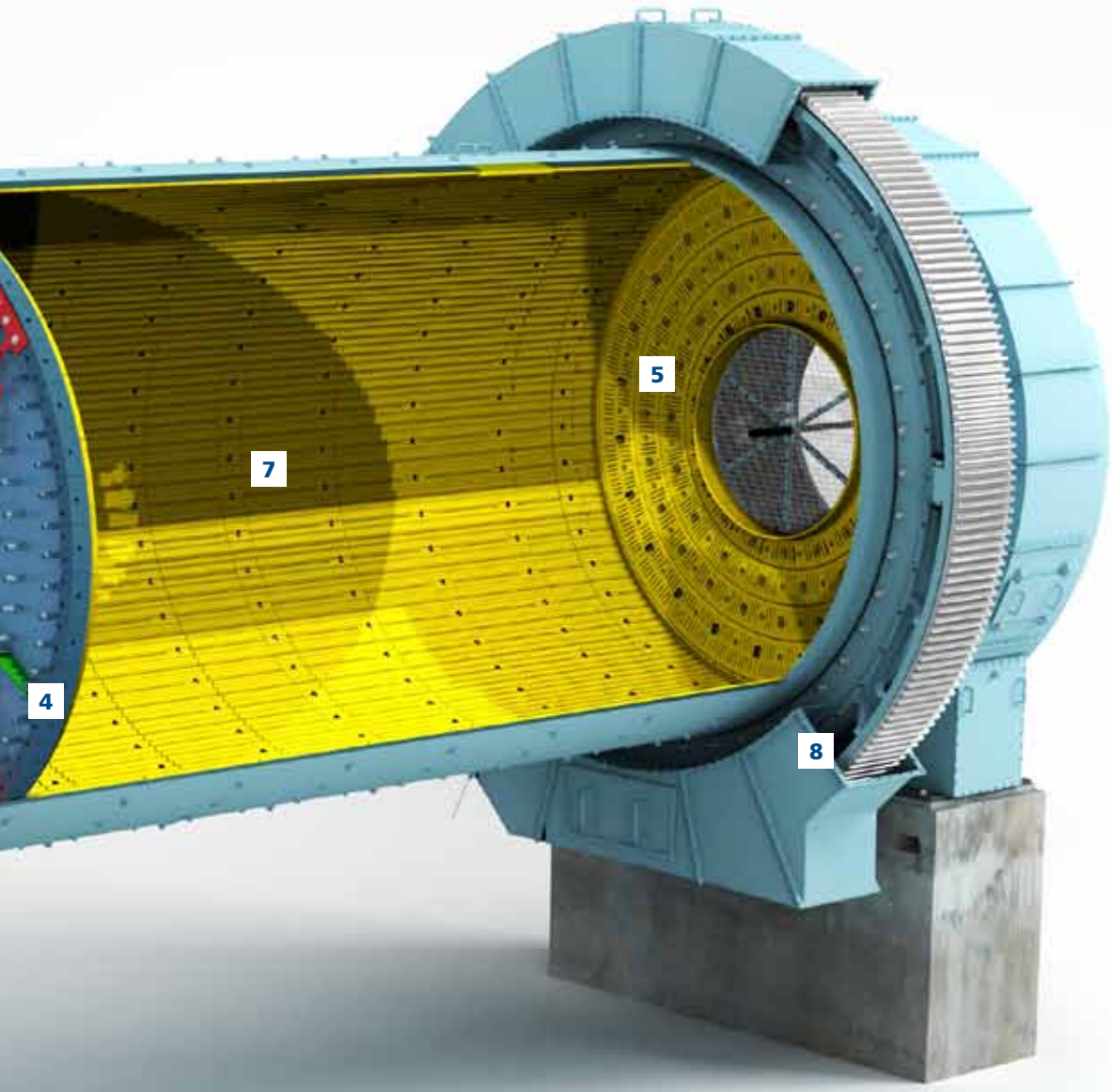

1 **Stationary inlet**

2 **Mill shell with welded-in slide rings and flange for girth gear**

3 **Slide shoe bearing**

4 **STANEX diaphragm with adjustable lifters**

5 **Outlet grate with adjustable lifters**

6 **Lining of coarse grinding compartment**

7 **Lining of fine grinding compartment**

8 **Girth gear with gear guard**

Proven mill design

LGD gear

UMS 5.0 x 19.5 in the workshop

Mill body
The mill body consists of an all-welded mill shell and a T-sectional welded-up slide ring at either end, the cylindrical part of which is welded onto the ends of the shell. Side-driven mills have a reinforced shell section with a flange for bolting on the girth gear. Centrally driven mills have an outlet cone with large openings for material and venting air. The large diameter of this cone is welded onto the cylindrical part of the outlet slide ring, while the small diameter of the cone has a flange for bolting on the coupling of the central drive. The mill shell has four manholes, two for each grinding compartment.

Slide shoe bearings
Each slide ring runs in a bearing with two self-aligning and hydrodynamically lubricated slide shoes. One of the slide shoes at the drive end holds the mill in axial direction. In the others, the slide rings can move freely in axial direction to allow for longitudinal thermal expansion and contraction of the mill body.

The slide shoes are water-cooled, and each bearing is provided with a panel-enclosed lubrication unit including oil tank, motorised low- and high-pressure oil pumps as well as an oil conditioning circuit with motorised pump for heating/cooling and filtration of the oil.

Each bearing is enclosed in a dustproof and oiltight casing with inspection doors. The bearings and the lubrication units include the necessary safety equipment for monitoring the bearing temperature, oil flow and oil pressure.

This equipment is connected to a local control panel with safety interlocking for both bearings.

Drive
The mills are driven by our FLSmidth MAAG LGD side drive, which has two built-in, self-aligning pinions in direct mesh with a girth gear, bolted onto a flange on the mill shell. The mill drive is provided with an auxiliary drive for slow turning of the mill and is lubricated from an integrated oil lubrication system with circulation pump, oil filter and oil cooler. The drive is protected by a gear guard with oil seals and inspection doors.

If requested, the mills can be provided with a central drive, type FLSmidth MAAG CPU planetary gearbox.

Inlet
The FLSmidth cement ball mill has a stationary steel plate inlet duct that leads the venting air into the mill.

The inlet duct is equipped with a manually operated throttle valve and a pressure monitor to adjust the pressure at the inlet end, thus preventing dust emission from the inlet. The feed chute, which is lined with bolted-on wear plates, slopes down through the air duct to the mill inlet opening.

Outlet
The mill has a stationary steel plate outlet casing that is insulated with mineral wool and provided with seals between the casing and the rotating outlet cone.

Mill linings and internal fittings
The mill, the inlet cone and the inner side of the inlet slide ring web, which are exposed to wear, are protected by bolted-on, wear-resistant lining plates.

The first compartment shell lining in the mill is a highly wear-resistant step type lining. A rubber backing prevents damage to the mill shell and lowers the noise emission from the mill during operation.

The shell lining in the second compartment or in the one-compartment mill is of the semi-boltless corrugated or classifying type. With both lining types, boltless lining bars are fitted between bolted-on lining rings, and a dovetail assembly between the parts keeps the boltless bars in place.

The STANEX diaphragm used for two-compartment ball mills is of a rigid design and is supported on a ring of cast steel segments that are bolted to the mill shell. The structural parts consist of a rigid mild steel supporting plate with spacers, onto which is bolted a mild steel front plate with large openings. The diaphragm is fitted with radial, adjustable lifters between the supporting plate and the front plate and with a central screen plate with large free area. Facing the first compartment, the STANEX diaphragm is provided with segmented wear-resistant grates bolted onto the front plate with throughgoing bolts. The openings in the front plate allow screened material to pass the diaphragm. The downstream side of the diaphragm is provided with highly wear-resistant, segmented lining plates.

At the discharge end of the mill, the wear-resistant outlet grate is fitted on a supporting structure that is bolted onto the web of the slide ring. The discharge end is also provided with radial, adjustable lifters behind the outlet grate.

Water cooling
A separate unit comprising water tank, pump(s) and valves for internal water cooling of the material in one or in both compartments of the cement mill is usually provided. The flow of cooling water into the outlet end of the mill is controlled by the temperature of the material leaving the mill. The water cooling in the first compartment is controlled by a thermocouple in the diaphragm measuring the material temperature. The thermocouple is connected to a wireless transmission system. Special nozzles ensure optimum water spraying without use of compressed air.

For mills with central drive, the connection between the rotating internal piping and nozzle and the stationary external water supply system goes via a specially designed stuffing box. This stuffing box is installed around the drive shaft of the gearbox.

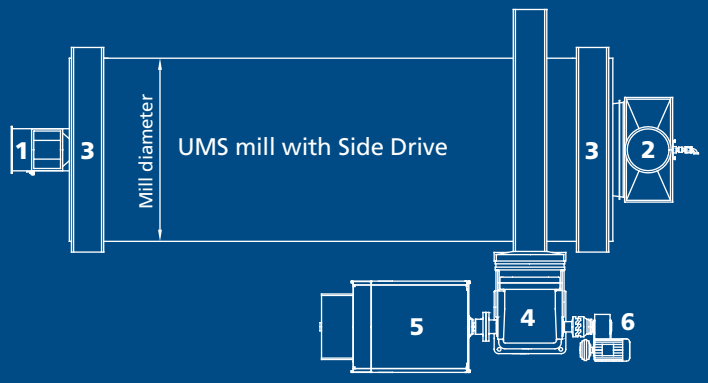

1 Inlet
2 Outlet casing
3 Slide shoe bearing
4 Main gearbox
5 Mill motor
6 Auxiliary drive

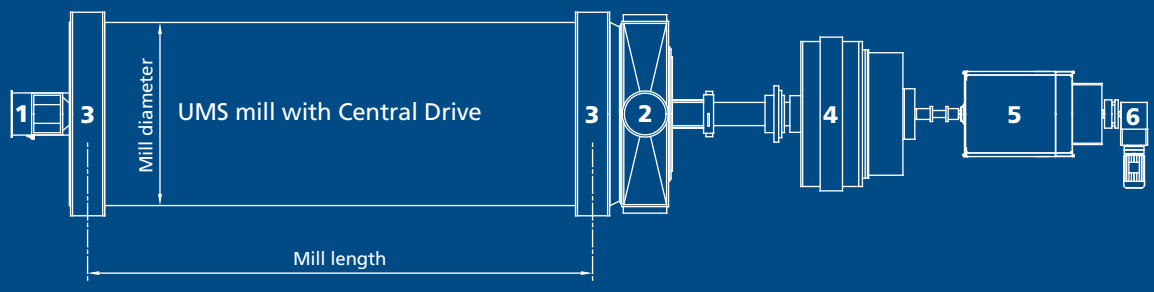

Mill		Motor*)	Gear size
Size (DxL)	Speed (rpm)	Installed motor power (kW)	LGD
3.8x13	16.86	2570	18
4.2x12.5	16.03	3130	18
4.2x14.5	16.03	3660	18
4.6x13.5	15.33	4205	32
4.6x14.5	15.33	4535	32
4.6x15.5	15.33	4870	32
5.0x14	14.69	5345	32
5.0x15	14.69	5750	50
5.0x16.5	14.69	6355	50
5.4x15	14.13	6985	50
5.4x16.5	14.13	7725	50
5.8x15.5	13.62	8680	80
5.8x17	13.62	9560	80

*) Max. power is calculated at Ch1 = ~30% of total power consumption

A wide range of equipment

The FLSmidth cement mill system comprises several combinations of mill diameters and mill lengths with capacities up to approximately 10,000 kW. The table shows a selected range of mills which can be supplied at a favourable cost and short delivery time.

All mill sizes are supplied with the FLSmidth MAAG LGD side drive, but other drive types, for example the FLSmidth MAAG CPU central drive, are available on request.

www.flsmidth.com

C 11-10 300-1-ENG

Project Centre Denmark
FLSmidth A/S
Vigerslev Allé 77
DK-2500 Valby
Copenhagen
Tel: +45 3618 1000
Fax: +45 3630 1820
E-mail: info@flsmidth.com

Project Centre USA
FLSmidth Inc.
2040 Avenue C
Bethlehem, PA 18017-2188
Tel: +1 610-264-6011
Fax: +1 610-264-6170
E-mail: info-us@flsmidth.com

Project Centre India
FLSmidth Private Limited
FLSmidth House
34, Egatoor, Kelambakkam
(Rajiv Gandhi Salai, Chennai)
Tamil Nadu – 603 103
Tel: +91-44-4748 1000
Fax: +91-44-2747 0301
E-mail: indiainfo@flsmidth.com

FLSmidth